MODEL WM-VI /SSWM-VI

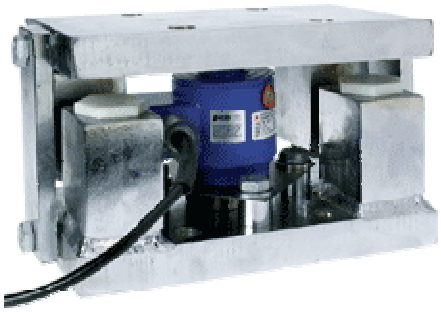

DESCRIPTION :

The WM - VI High Capacity Tank / Hopper / Rail Weigh Module for 90210 / 90310 hermetically sealed canister load cells

- Capacities from 5Tf to 200Tf
- Stainless Steel or Mild Steel zinc plated
- Self checking - no check rods needed
- Over turn restraint option

DIMENSIONS :

CAPACITY (Tf)	L/C USED	MODEL NO.	A	B	C Max.	D	E	F	G	H Dia.
5 - 30	90210/90310	WMVI-A	254.0	152.0	156.0	19.0	114.0	76.0	25.0	17.5
45,50,60	90210/90310	WMVI-B	279.0	203.0	229.0	25.0	152.00	89.0	38.0	21.0
100,150,200	90210/90310	WMVI-C	330.0	254.0	310.0	25.0	203.0	114.0	51.0	28.0

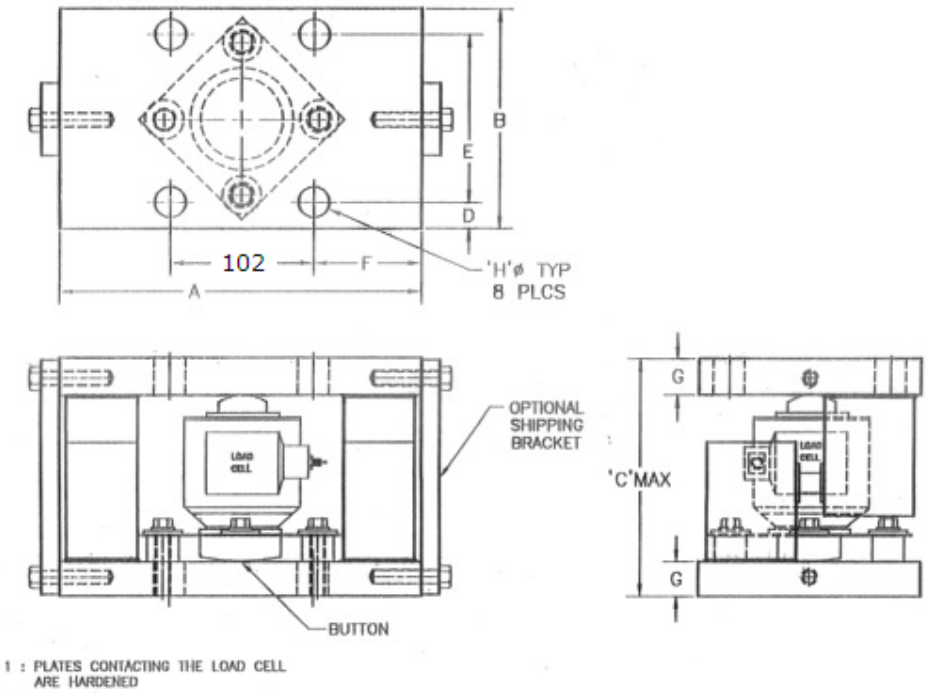

All dimensions are in mm

APPLICATIONS :

- Truck scales
- Heavy-capacity horizontal tanks
- Railroad track scales

Specifications are subject to change without prior notice

Manufactured by:

ADI ARTECH
TRANSDUCERS PVT. LTD.
A Joint venture with
ARTECH INDUSTRIES INC., U.S.A

917/1, G.I.D.C. Estate, Makarpura Vadodara - 390 010. Gujarat, INDIA
Ph : +91-265-2655083, 2651023
Fax : +91-265-2638751
M : +91-9374068998, 9327425560
Email : sales@adiartech.com, adiartech@adiartech.com
Website: www.adiartech.com